DELTA 三相鋁軌式電源濾波器

特點

- VOLTAGE RATING ..... 520 VAC.
- CURRENT RATING
  A. AT 520VAC .....10 ~ 50 A RMS Max.
- OPERATING FREQUENCY.....50/60 Hz
- LEAKAGE CURRENT: EACH LINE TO GROUND
  A. @520VAC 50Hz .....5.0 mA Max.
- HIPOT RATING (FOR 1 MINUTE)
  A. LINE TO GROUND ..... 3000 VDC
  B. LINE TO LINE ..... 2250 VDC
- TEMPERATURE RANGE: −25 ~ +100°C (DERATING ABOVE 50°C)

規格

MINIMUM INSERTION LOSS IN dB: (AT 50 OHM SYSTEM)

	FREQ. MHz	.01	.05	.10	.15	.50	1.0	5.0	10	30
10A	COM. MODE dB	10	20	30	35	40	40	30	20	5
	DIF. MODE dB	3	20	40	50	50	45	40	35	20
20A	COM. MODE dB	4	10	15	20	35	35	35	25	5
	DIF. MODE dB	3	10	20	25	25	30	45	45	15
30A	COM. MODE dB	2	3	12	18	30	35	40	25	10
	DIF. MODE dB	4	15	15	30	40	40	45	40	20
50A	COM. MODE dB	3	5	7	10	20	30	40	30	15
	DIF. MODE dB	3	15	20	20	35	40	30	25	20

SAFETY

DELTA 三相鋁軌式電源濾波器

訂購型號

10 TDPS6 (D)

10 A	20 A	30 A	50 A

(D) 鋁軌式

尺寸

PHYSICAL DIMENSIONS:

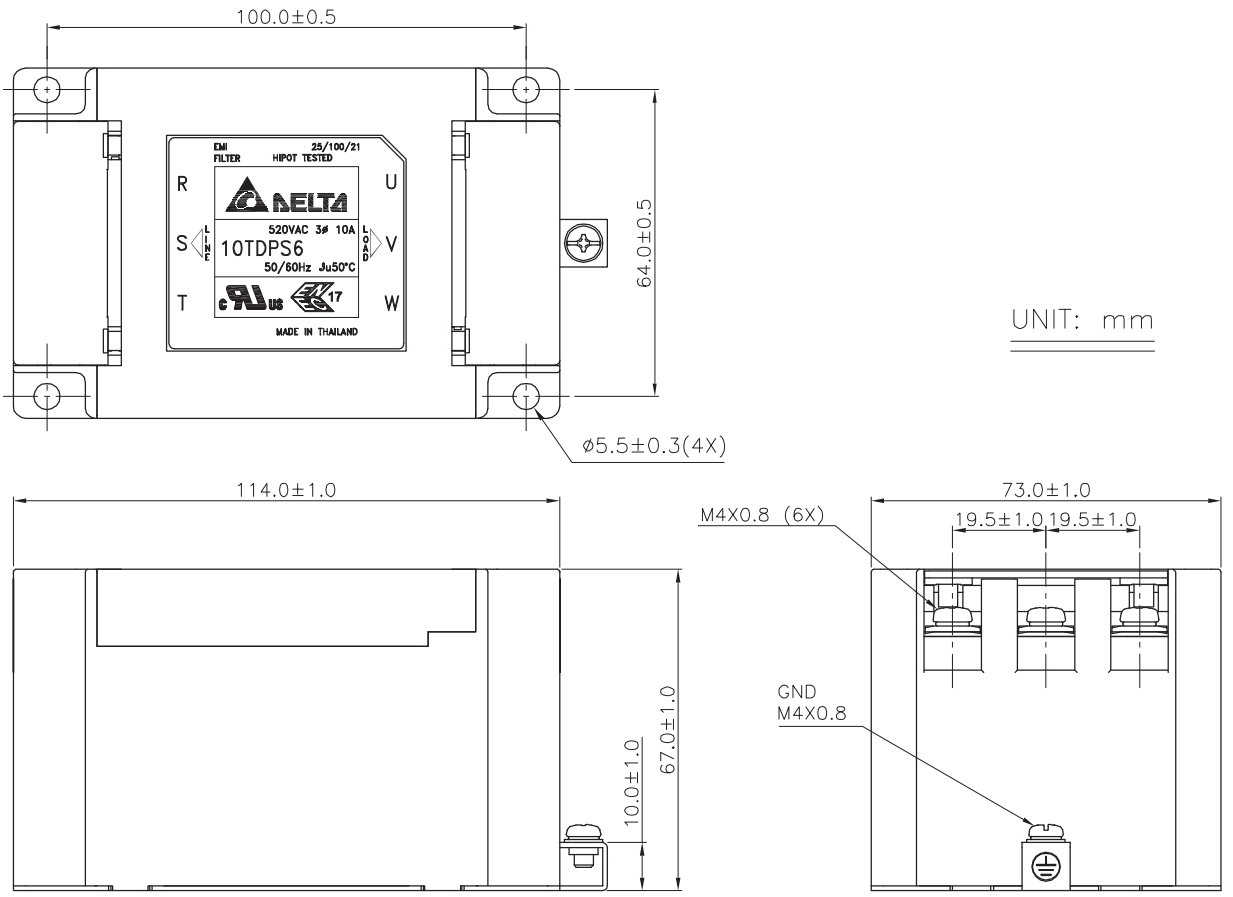

UNIT: mm

SCHEMATIC:

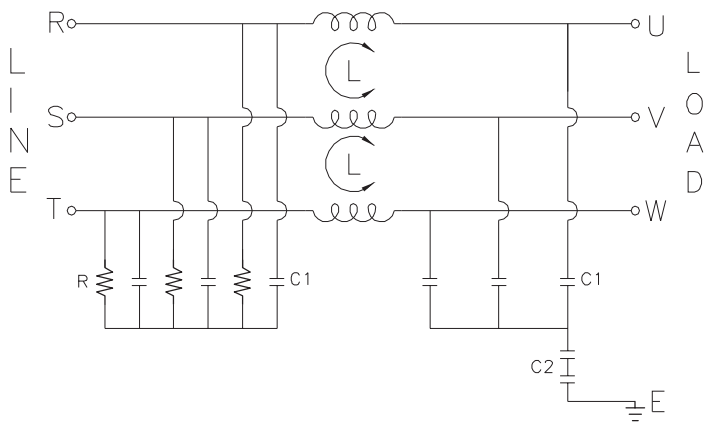

L: 10.0mH
C1: 2.2uF
C2: 0.068uF
R: 1.0MΩ