FFUBA MPG-N2脈波信號產生器［電子手輪］ MPG系列

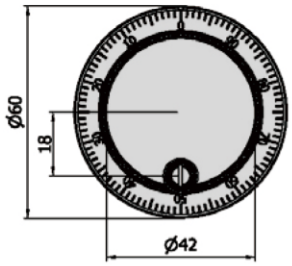

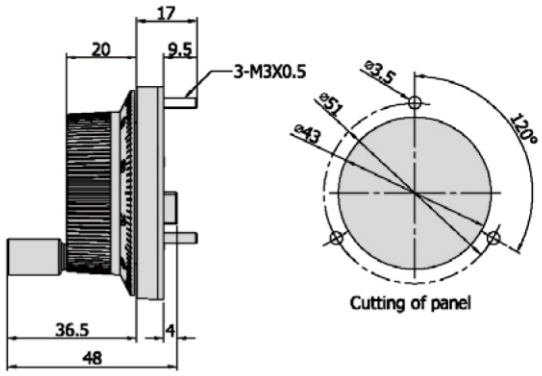

ELECTRICAL SPEC.

Detection System	Incremental 增量型
Output Wave 輸出波形	Square Wave 方波
Standard Number of Pulse Per Revolution 解析	100
Output Phase 輸出相	AB phase
Electronics 電路特性	NPN Voltage 電壓型 and Line Driver 差動式
Power Supply 供應電源	DC 8~26V, DC 5V fixed
Current Consumption 消耗電流	< 60 mA
Output Capacity 輸出容量	Sync. Current: 20 mA, Residual Voltage: 0.5V or less
Max. Response 最大響應頻率	5K Hz
Phase Different 相位差	A, B phase different 90°±45° (T/4±T/8)
Wave Form Rise / Fall 波形上下時間	5 μs or less for NPN Voltage 電壓型, 350 ns or less for Line Driver 差動式

MECHANICAL SPEC.

Starting Torque (at 25°C) 起動轉矩	> 600 g
Max. Speed 最大機械容許速度	600 rpm (Maximum 瞬間容許速度); 200 rpm (Continuous 連續容許速度)
X.Y.Z. Vibration 震動	10 ~ 50 Hz / 1.5 mm X.Y.Z. 2hr)
Shock 衝擊	50 g per 11 ms
Rotational Life 回轉壽命	10^6 cycles (200 rpm)
Weight 重量	≤ 250 g

ENVIRONMENTAL SPEC.

Operating Temp. / Humidity 操作溫度/濕度	-10°C ~ 60°C, RH 35% ~ 90% (No Condensation)
Storage Temp. 儲存溫度	-20°C ~ 80°C

OUTPUT WAVE FORM (Clockwise rotation is "CW Rotation" looked from the front side)

NPN Voltage / NPN Open Collector

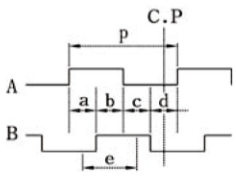

Line Driver

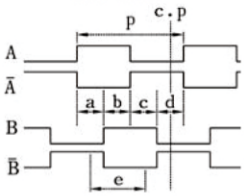

- P = 1 P/R; a, b, c, d = P/4 ± P/6
- C.P= click point 停止點信號
  (For 25 P/R, C.P is at each position of a, b, c, d.
  25 PPR 的停止點信號在 a, b, c, d 各個位置。)
- Point e is recommended as the system switching timing.
  e 點爲建議信號讀取/切換的範圍。

ORDERING INFORMATION

MPG – N2 – *Pulse per Revolution 解析* **–** *Electronics & Supply Voltage 電路特性 & 供應電源*

100: 100 PPR

V: NPN Voltage 8~26Vdc
V5: NPN Voltage 5Vdc
L: Line Driver 5Vdc

ELECTRICAL CONNECTION

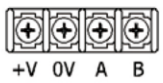

NPN Open Collector

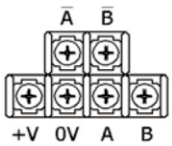

Line Driver