AB-800 WEIGHING INDICATOR

High Quality / High Performance / Low Cost

DIN 144x72

可程式控制器
PLC

電腦
PC

粉粒體配料/包裝機
Packing & Batching
Control system

重量分選機
Check Weighing

液體灌裝機
Drum Filling

大型顯示幕
Remote Display

特 性 Features

- **Built in Modbus RTU mode networks**
  -High speed communication, Baud-rate up to 57600 bps
  -Easily to connect with Human Machine Interface, PLC and PC
- **Built in RS-232C/RS-422/RS-485 interface com1(CH1)**
- **Over 10 weighing serial data output can be choice**
  -Easily to connect with Remote-Display, PLC and PC
- **International Free Main Power 85 ~ 265 VAC 50~60Hz**
- **Directly key in the Load-Cell signal voltage (mV/V)**
  -No need to calibration
- **Adjustable hardware & software filter**
  -Prevent vibration of environment
- **Built in 10 sets control Input (InA, InB & In1 ~In8)**
- **Built in 8 sets NPN transistor control output**
- **8 LED lamps to monitoring the 8in or 8out status**
- **1 sub-Display provides feedback on set-point or TARE weight**
- **Over 10 weighing control mode to select**
- **8 sets Formula of control data setting for difference products**
  -The Formula No.(F0~F7) can select by PLC or Code switch

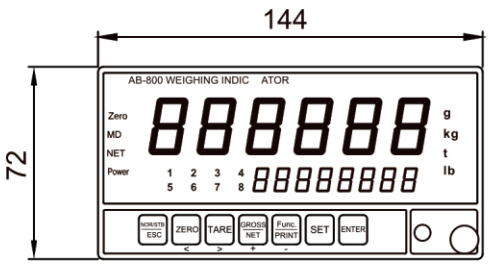

Front view

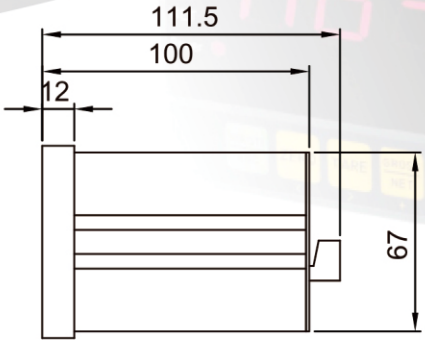

Side view

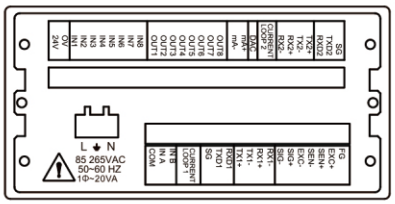

Back view

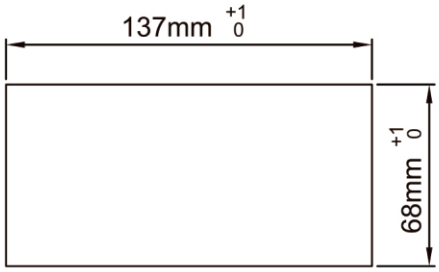

Cutout

UNIT: mm

規 格 Specifications

串列輸出/入訊號(Serial I/O)	COM1(CH1) : RS-232C/RS-422/RS-485
串列資料模式Serial communication protocol (COM1)	ModBus RTU, Continue mode, Print mode
最大顯示解析度(Maximum display resolution)	±60,000 D (-199999 ~ 999999)
A/D 解析度(A/D resolution)	8,000,000 counts
A/D 轉換速率(A/D conversion rate)	Max. 300 times/sec
A/D轉換方式(A/D coversion method)	ΔΣ
敏感度(Input sensitivity)	Min. 0.2 uV/D
傳感器激發電壓(Load-Cell excition)	5VDC±5%,280 mA (up to 8 L.C. at 350Ω)
主顯示幕(Main-Display)	20mm(0.8")high, 6-digital 7-segment LED display
輔顯示幕(Sub-Display)	9mm(0.36")high, 8-digital 7-segment LED display
電源(Main power supply)	85~265 VAC 50~60Hz max. 20VA
機構尺寸(Physical dimensions)	144w x 72h x 115d mm
挖孔尺寸(Panel cutout dimensions)	137(+1.0/-0)w x 68(+1/-0)h mm
重量(Net weight)	0 .7kg
操作溫度(Operating temperature)	0 ℃~40 ℃

選 購 品 Options

AB-OP01	COM2(CH2): RS-232C/RS-422/RS-485
AB-OP03	0~20mA/4~20mA/0~5V/0~10V Analog output(16 bits)
AB-OP09	Real Time Clock (RTC)